TEW4922 is designed and approved to be used as a receive transformer with

MITEL MT89760/-60B and **MT89790/-90B** devices.

Fully encapsulated in epoxy.

Also suitable as input/output transformer for other makes of T1/CEPT interface devices.

Typical applications are:

- Primary rate ISDN network nodes.
- PBX or computer to T1/CEPT Digital Trunks.
- High speed data link using T1/CEPT Digital Trunk.

Designed to meet reinforced insulation requirements to EN60950 and EN41003.

RoHS compliant parts can be ordered as 4922-1-NL, 4922-2-NL, 4922-3-NL, or 4922-4-NL.

MECHANICAL

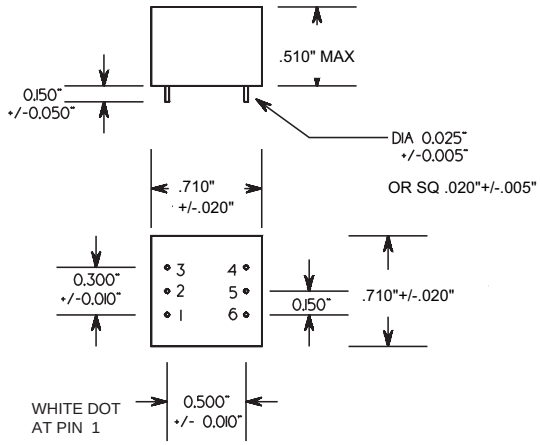

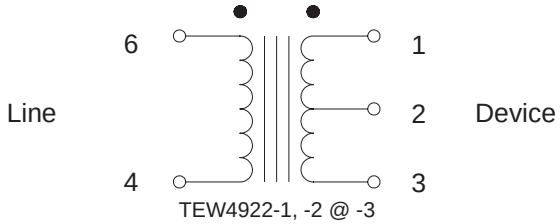

TEW4922-1, -2 @ -3

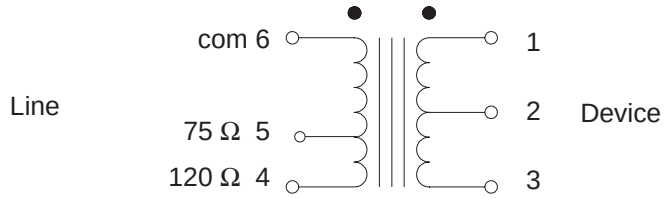

TEW4922-4

ELECTRICAL SPECIFICATION			TEW4922-1	- 2	- 3	- 4
Devices			MT89760 MT89760B	MT89790 MT89790B	MT89790 MT89790B	MT89790 MT89790B
Application			T1	CEPT	CEPT	CEPT
Line Impedance			100 Ω	120 Ω	75 Ω	75/120 Ω
DCR	(Ohms)	(1 - 3) (6 - 4)	1.55 0.85	1.55 1.08	1.11 0.55	1.1 0.7
Turns ratio		(1 - 2) : (2 - 3): (6 - 4) (1 - 2) : (2 - 3): (6 - 5)	1: 1 : 1 —-	1 : 1 : 1.26 —-	1 : 1 : 1 —-	1 : 1 : 1.26 1 : 1 : 1
Inductance	(mH)	(6 - 4)	> 3.5	> 2.8	> 0.70	> 2.8
Longitud. Bal.			T1.408	I.431	I.431	I.431
Return Loss			T1.408	G.703	G.703 BS6328	G.703 BS6328
Dielectric Strength, Volts RMS		4000V	4000V	4000V	4000V	4000V
Temperatures,	Operating Storage	0° to 50°C -20° to 80°C				